JACK

迅利IIIE系列无油直驱平缝机

零件手册

1

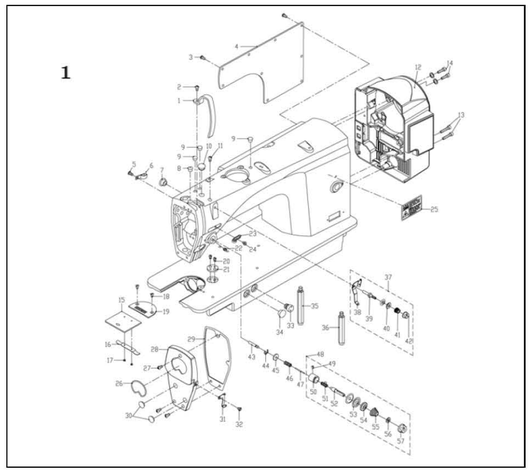

1.机壳、外装分组件　Machine Case Components

序号 Ref.No.	图号 Part No.	名　称	Description	件数 Amt. M	H
1	300249	JK-8990挑线杆护罩（喷漆）	Thread take-up lever cover	1	1
2	101S11001	JK-5550-0106后窗板螺钉	Screw	1	1
3	101S11001	JK-5550-0106后窗板螺钉	Screw	9	9
4	302427	后窗板（喷漆）	Slide plate	1	1
5	101S11001	JK-5550-0106后窗板螺钉	Screw	1	1
6	11412051	JK-8990-0111弯钩	Upper shaft front metal oil wi	1	1
7	11422003	JK-8990-0143孔塞	Rubber plug	1	1
8	10122013	JK-5550-0307针杆上衬套孔塞	Rubber plug	1	1
9	10122005	JK-5550-0113挑线连杆销螺孔塞	Rubber plug	3	3
10	10122004	JK-5550-0112针杆曲柄螺孔塞	Rubber plug	1	1
11	101S11001	JK-5550-0106后窗板螺钉	Screw	1	1
12	13733011	JK-迅利IIIE一体机电控(触麦双开关)	electronic control　module	1	1
13	S05146	GB/T70.1 螺钉 M5×40	Screw	2	2
14	114S30001	JK-8990-0126螺栓(内六角)	Bolt	2	2
15	10115002	JK-5550-0639推板	Slide plate	1	1
16	10127009	JK-5550-0640推板簧	Slide plate spring	1	1
17	101S11019	JK-5550-0641推板簧螺钉	Screw SM2/32"×56 L=1.9	2	2
18	104S17002	JK-8900-0637针板螺钉(进口)	Screw	2	2
19	10115001	JK-5550-0636针板	Throat plate	1	
	10115012	JK-8990DH-3SS针板	needle plate		1
20	114S11006	JK-8990-0136卷边器螺钉	Screw	2	2
21	11412040	JK-8990-0116卷边器座	Ruler stop seat	1	1
22	101S15006	JK-5550-0330夹线器螺钉	Screw	1	1
23	10113004	JK-5550-0316右线勾	Arm thread guide A	1	1
24	101S11007	JK-5550-0317右线勾螺钉	Screw	1	1
25	11237003	JK-8900D-0113警告标记	Attention seal	1	1
26	10131021	JK-5550机头牌	Brand card	1	1
27	101S11001	JK-5550-0106后窗板螺钉	Screw	3	3
28	302068	JK-8990面板（喷漆）	Face plate	1	1
29	11422001	JK-8990-0103面板垫	Face plate packing	1	1
30	10122003	JK-5550-0111面板调节孔塞	Rubber plug	2	2
31	11413013	JK-迅利IIN-0318左线勾	Arm thread guide B	1	1
32	101S11007	JK-5550-0317右线勾螺钉	Screw	1	1
33	11402033	JK-8990-0182推气阀	Leak gas valve	1	1
34	11422051	JK-8990-0141橡皮塞	Rubber plug	1	1
35	13701014	JK-迅利IIIB-0159长脚柱	long stilt	1	1
36	13701013	JK-迅利IIIB-0158短脚柱	short stilt	1	1
37	1141300400	JK-迅利 II-0132小夹线器组件	Thread tension asm,No.1	1	1
38	11412066	JK-迅利II-0226过线板	Thread tension guide	1	1
39	11410008	JK-迅利II-0126小夹线器螺钉	Thread tension post	1	1
40	11212004	JK-8900D-0124小夹线板	Thread tension disk	2	2
41	11227001	JK-8900D-0125小夹线弹簧	Thread tension spring	1	1
42	101S16019	JK-5550-0633小夹线器螺母	Thread tension nut	1	1
43	13726023	JK-迅利IIIB-0140松线辅钉	Tension release　supporting pin	1	1
44	H05012	GB/T896-1986挡圈4	E-ring	1	1
45	10128001	JK-5550-0332松线辅钉垫片	Washer plate	1	1
46	10127003	JK-5550-0334松线辅钉弹簧	Tension release　pin　spring	1	1
47	10126002	JK-5550-0324松线钉	Thread release pin	1	1
48	1041300500	夹线器组件	Thread tension asm.	1	
	400527	JK-8990DH-3SS夹线器部件	Thread tension asm.		1
49	101S15005	JK-5550-0323夹线螺钉紧固螺钉	Screw	1	1
50	10403009	JK-5550-0320机线弹簧调节器	Thread tension post base	1	1
51	10127001	JK-5550-0321机线簧	Takrup spring	1	1
52	101S30002	JK-5550-0322夹线螺钉	Thread tension post	1	1
53	10112005	JK-5550-0325夹线板	Thread tension disk	2	2
54	10112006	JK-5550-0326松线板	Disk stopper	1	1
55	10127002	JK-5550-0327夹线簧	Tension spring	1	1
56	10112007	JK-5550-0328夹线制动板	Tension disk stopper	1	1
57	101S16013	JK-5550-0329夹线器螺母	Tension nut	1	1

2

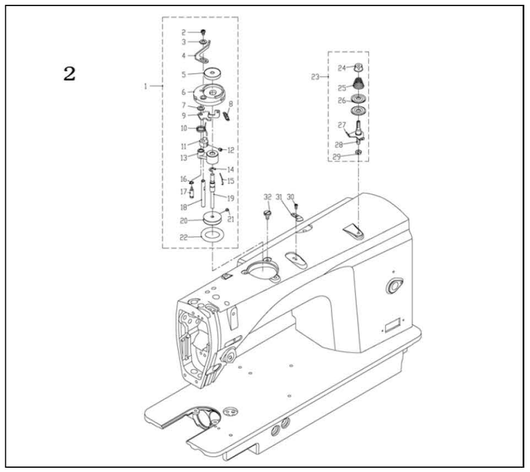

2.梭心绕线组件　Bobbin winder components

序号 Ref.No.	图号 Part No.	名　称	Description	件数 Amt. M	H
1	1143103B00	JK-8990-0201绕线器组件(长)	Bobbin winder asm.	1	1
2	114S11008	JK-8990-0201-02螺钉	Screw	1	1
3	1142B009	JK-8990-0201-17平垫圈	Vertical roller washer	1	1
4	11413012	JK-8990-0230压线控制板	thread controller	1	1
5	11411003	JK-8990-0212绕线衬垫	Bobbin cushion	1	1
6	11431002	JK-8990-0209绕线装置主座	Bobbin fitting basis compl	1	1
7	1142B010	JK-8990-0243-12平垫圈	washer	1	1
8	11427036	JK-8990-0201-11弹簧	Spring	1	1
9	11401058	JK-8990-0201-07调节板	Adjusting plate	1	1
10	11427037	JK-8990-0201-12绕线器复位簧	winder reset spring	1	1
11	11410003	JK-8990-0241-01绕线凸轮	Bobbin cam shaft compl	1	1
12	S09042	GB/T 77-2000 螺钉M5x5	Screw M5x5	1	1
13	11405022	JK-8990-0201-06绕线器连杆	winder connecting rod	1	1
14	H05006	GB/T 896-1986挡圈5	E-ring	1	1
15	11427038	JK-8990-0201-10弹簧	Spring	1	1
16	H03016	GB/T 894.1-1986挡圈6	E-ring	1	1
17	114S31001	JK-8990-0201-15螺钉销	screw pin	1	1
18	11402044	JK-8990-0241-03绕线凸轮轴	winder camshaft	1	1
19	11402043	JK-8990-0201-09绕线器主轴	main winder shaft	1	1
20	11431050	JK-8990-0201-04绕线轮	winder wheel	1	1
21	S09040	GB/T 77-2000 螺钉M4x8	Screw M4x8	1	1
22	001033	JK-8990-0201-18O型圈	Ring	1	1
23	1141300600	底线夹线器	Bobbin thread tension asm.	1	1
24	11411004	夹线螺母	Thread tension nut	1	1
25	11427006	小夹线弹簧	Connecting rod spring	1	1
26	10112005	夹线板	Thread tension disk	2	2
27	11413022	夹线过线板	Bobbin thread tension rod asm.	1	1
28	112S13004	夹线螺钉	Thread tension Screw	1	1
29	101S16053	螺母SM11/64"×40	Nut SM11/64"×40	1	1
30	114S11015	JK-迅利 II-1724割线刀螺钉	Screw	2	2
31	11419001	JK-8990-0225割线刀	Thred cutter	1	1
32	114S11003	JK-8990-0229螺钉SM3/16"×28	Screw SM3/16"×28 L=10	3	3

3

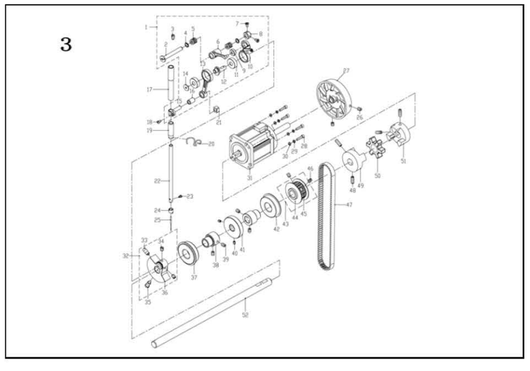

4

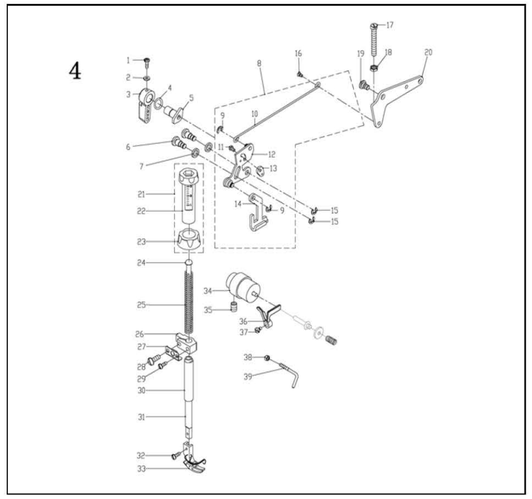

3.上轴、针杆分组件　Main shaft & Needle bar components

序号 Ref.No.	图号 Part No.	名　称	Description	件数 Amt. M	H
1	1143B00100	JK-8990挑线组件	Thread take-up asm.	1	
	1143B00500	JK-8990DH-3SS-0337挑线杆组件	Thread take-up asm.		1
2	11426001	JK-8990-0338挑线连杆销	Thread take-up asm.	1	1
3	101S15010	JK-5550-0615左销螺钉	Thread take-up crank shaft	1	1
4	11411005	JK-8990-0340轴承支撑挡圈	Screw	2	2
5	S08003	GB/T5801-1985滚针轴承K7x10x10	Bearing support	2	2
6	1143B004	JK-8990-0337-03挑线杆连杆	Bearing	1	1
7	114S11008	JK-8990-0360挡圈螺钉	Thread take-up lever crand rod	2	2
8	11403002	JK-8990-0339挡圈	Screw	1	1
9	B01013	GB/T 276-1994轴承605	Thrust collar asm.	1	1
10	1143B003	JK-8990-0337-02挑线杆	Thread take-up lever	1	
	1143B006	挑线杆	Thread take-up lever		1
11	B01014	GB/T 276-1994轴承608	Bearing 608	2	2
12	11402007	JK-8990-0337-004挑线杆轴	Needle bar crand	1	
	11402042	挑线杆轴	Needle bar crand		1
13	1143B002	JK-8990-0337-01针杆连杆	needle bar connecting rod	1	1
14	114S30004	JK-8990-0337-05挑线曲柄左螺钉	Screw (left twist)	1	1
15	11404005	JK-8990-0330针杆连接柱	Needle rod holder	1	1
16	12203004	JK-8988-0301-2针杆连杆铜套	needle-bar rod copper sleeve	1	1
17	11403006	JK-8990-0325针杆上套	Needle bar metal,upper	1	1
18	101S11005	JK-5550-0304螺钉	Screw	1	1
19	11403007	JK-8990-0326针杆下套	Needle bar metal,lower	1	
	11403031	针杆下套	Needle bar metal,lower		1
20	10413001	JK-8990-0309针杆下衬套线钩	Needle bar metal,lower thread guide	1	1
21	11409001	JK-8990-0332针杆连接柱滑块	Slide block	1	1
22	11402034	JK-8990-0327针杆（DLC处理）	Needle bar	1	
	11402035	JK-8990DH-3SS-0307针杆(DLC处理)	Needle bar		1
23	104S11006	JK-8990-0312支针螺钉(进口)	Screw	1	1
24	10113002	JK-5550-0311针杆线勾	Needle bar thread guide	1	
	11412063	JK-8990DH-3SS-0349针杆线勾	Needle bar thread guide		1
25	10117001	JK-5550-1015机针(14#)	Needle DB×1#14	1	
	10117002	机针DP×5#21(风琴)	Needle DP×1#21		1
26	S10009	GB/T80-1985螺钉M6×8	Screw M6×8	2	2
27	11435011	JK-8990白色手轮（喷漆）	Hand wheel	1	1
28	114S13001	GB/T 70.1螺钉 M5x20	Screw M5x20	4	4
29	W03002	GB/T 7246-1987 M5弹性垫圈	elastic washer	4	4
30	GB/T 848.5	白色平垫圈	white washer	4	4
31	13733012	JK-迅利IIE一体机电机(配触)	Motor A asm.	1	1
32	1140400200	JK-8990-0302针杆曲柄组件	Cornter weight asm.	1	1
33	101S15004	JK-5550-0218针杆曲柄紧固螺钉	Screw	1	1
34	101S15007	JK-5550-0407压杆导架螺钉	Screw	2	2
35	101S11003	JK-5550-0216针杆曲柄定位螺钉	Screw	1	1
36	11404003	JK-8990-0303针杆曲柄	Cornter weight	1	1
37	B10001	GB/T276轴承6204RZ	Bearing	1	1
38	11403002	JK-8990-0307主轴轴套	Bearing support	2	2
39	S10009	GB/T80-1985螺钉M6×8	Screw	4	4
40	113S14002	JK-8920D-1133螺钉	Screw	2	2
41	11435008	JK-8990-0350绕线器驱动轮	Bobbin winder driving wheel	1	1
42	B01003	GB/T276轴承 6304RZ	Bearing	1	1
43	1373500400	JK-迅利IIIB-0350上同步齿轮组件	Sprocket upper asm.	1	1
44	11408001	JK-8990-0322-02挡圈	E-ring	2	2
45	13735006	JK-迅利IIIB-0350-02上同步齿轮	Sprocket upper	1	1
46	S10006	GB/T80-1985螺钉M6×8	Screw	2	2
47	13735002	JK-迅利IIIB-0354同步带	Timing belt	1	1
48	S10038	GB/T80-1985螺钉M6×16	Screw	4	4
49	11403003	JK-8990-0308-01联轴器	Coupling	1	1
50	11422004	JK-8990-0308-01减震橡胶	damping rubber	1	1
51	11403004	JK-8990-0308-02联轴器	Coupling	1	1
52	11402004	JK-8990-0301主轴	Main shaft	1	1

4.抬压脚及松线组件　Hand lifter & Tension release component

序号 Ref.No.	图号 Part No.	名　称	Description	件数 Amt. M	H
1	101S11010	JK-5550-0414压脚扳手螺钉	Screw	1	1
2	10128002	JK-5550-0414-01压脚扳手螺钉垫圈	presser foot wrench washer	1	1
3	10111028	JK-孟春(新)-0413压脚扳手	Hand lifter	1	1
4	001004	GB/T3452.1-19920型圈 4×1.8	Rubber ring	1	1
5	1041000200	JK-8900-0415-00压脚扳手凸轮分部件	Hand lifter cam asm.	1	1
6	101S20001	JK-5550-0419前杠杆螺纹销	Link shaft	2	2
7	10128015	JK-5550-0419-01螺纹销橡胶垫圈(厚)	threaded pin washer　(thick)	2	2
8	1370500400	JK-迅利IIB-0406提提拉杆组件	Lifting lever connect rod asm.	1	1
9	H05006	GB/T896-1986挡圈5	E-ring	1	1
10	11405004	JK-8990-0405抬压脚拉杆	Lifting lever connect rod	1	1
11	S05011	GB/T70-1985螺钉M4×6	Screw	1	1
12	1140500500	JK-8990-0406抬压脚前杠杆	Lifting lind compl	1	1
13	11412014	JK-8990-0407平板	Plate	1	1
14	13712004	JK-迅利IIB-0413压脚升降板	Lifting plate	1	1
15	H05003	GB/T896-1986挡圈5	E-ring	1	1
16	101S20004	抬压脚拉杆螺钉	Screw	2	2
17	114S12001	JK-8990-0448螺钉	Screw	1	1
18	114S16005	JK-8990-0537螺母	Nut	1	1
19	101S20003	JK-5550-0429后杠杆轴位螺钉	Hinge screw	1	1
20	13705010	JK-迅利IIB-0416抬压脚后杠杆	Lifting lever link	1	1
21	10111027	JK-孟春(新)-0401-00调压螺钉组件	Presser spring regulator asm.	1	1
22	10111034	JK-5550-0401调压螺钉	Presser spring regulator	1	1
23	10111036	JK-5550-0402调压螺母	Nut	1	1
24	11405008	JK-8990-0417调压导杆	Presser guide bar	1	1
25	11427007	JK-8990-0424调压弹簧	Presser spring	1	
	11427024	JK-8990DH-3SS-0424调压弹簧	Presser spring		1
26	11404006	JK-8990-0415压杆导架	Presser guide bar bracket	1	1
27	11412018	JK-8990-0418导架板	Guide bracket plate	1	1
28	114S11004	JK-8990-0435螺钉11/64x40 L=18	Screw	1	1
29	101S11005	JK-5550-0304针杆连接柱螺钉	Screw	1	1
30	11403008	JK-8990-0401压杆套	Bushing	1	1
31	11402009	JK-8990-0416压杆	Presser bar	1	1
32	101S11009	JK-5550-0412活压脚螺钉	Screw	1	1
33	1141600300	JK-迅利 II-0444压脚组件	Presser foot asm.	1	
	1011600400	JK-5550活压脚板部件	Presser foot asm.		1
34	1373000900	JK-迅利IIB-0447松线电磁铁组件	thread-loose electromagnet device	1	1
35	101S15006	JK-5550-0330夹线器螺钉	Screw	2	2
36	13701017	JK-迅利IIB-0423松线顶板	Thread tension release wire	1	1
37	137S13013	JK-迅利IIB-0415抬压脚拉杆轴位螺钉	Hinge screw	1	1
38	401S16001	JK-T1850-0118螺母	Nut	1	1
39	13113001	JK-8995-0145保线勾	Presser bar thread guide	1	1

5

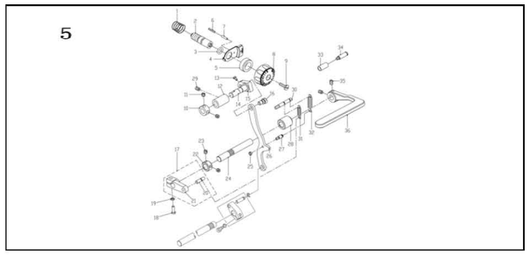

5.送料调节分组件　Feed adjust mechanism compinents

序号 Ref.No.	图号 Part No.	名　称	Description	件数 Amt. M	H
1	11427035	JK-迅利 II-0561针距按键簧	Spring	1	1
2	10426006	JK-8900-0703送料调节螺柱	Feed regulator screw	1	1
3	10122016	JK-5550-0704送料调节螺钉O形圈	Rubber ring	1	1
4	11412079	JK-迅利 II-0659按键	button	1	1
5	11422007	JK-8990-0546橡皮塞	Rubber plunger	1	1
6	11427034	JK-迅利 II-0560送料距锁合簧	Spring	1	1
7	11426022	JK-迅利 II-0558止动销	Pin	1	1
8	11411039	JK-8990D-0545送料距旋钮	Feed dial	1	1
9	101S11022	JK-5550-0702送料距旋钮螺钉	Screw	1	1
10	11408007	JK-8990-0534送料调节座挡圈	Collar asm.	1	1
11	101S15002	JK-5550-0207送料轴挡圈螺钉	Screw	2	2
12	11403009	JK-8990-0520送料调节器轴套	Adjusting base shaft metal	1	1
13	101S11005	JK-5550-0304针杆连接柱螺钉	Screw	2	2
14	13726001	JK-迅利IIB-0565送料调节器轴销	Feed adjusting base pin	1	1
15	13704014	JK-迅利IIB-0564送料调节器	Feed adjusting base	1	1
16	11402012	JK-8990-0519送料调节销	Feed adjusting pin	1	1
17	1370401300	JK-迅利IIB-0513倒送料曲柄组件	Feed lever arm asm.	1	1
18	101S11016	JK-5550-0621螺钉	Screw	1	1
19	W03002	GB/T7246-1987 M5弹性垫圈	Spring washer	1	1
20	13726013	JK-迅利IIB-0513-01倒送料曲柄销	Feed lever arm pin	1	1
21	13704016	JK-迅利IIB-0513-02倒送料曲柄	Feed lever arm	1	1
22	20108002	JK-796-1309挡圈	Thrust collar asm.	1	1
23	201S15003	S0678螺钉	Screw	2	2
24	13702013	JK-8990-0522送料杠杆轴	Feed lever shaft	1	1
25	114S16004	JK-8990-0536螺母	Nut	1	1
26	13712001	JK-迅利IIB-0566送料摆动杆	Feed adjusting rod	1	1
27	114S30007	JK-8990-0528弹簧垂直螺钉	Screw	1	1
28	11403010	JK-8990-0523送料扳手轴套	Feed lever shaft metal	1	1
29	S10009	螺钉	Screw	1	1
30	13726021	JK-迅利IIB-0555弹簧挂销	spring pin	1	1
31	13727017	JK-迅利IIB-0515送料杠杆拉簧	Feed lever spring	1	1
32	13727011	JK-迅利IIB-0512送料调节弹簧	Feed adjusting spring	1	1
33	11203001	JK-8900D-0118倒送料扳手定位套	Reverse feed lever stopper	1	1
34	112s11002	JK-8900D-0117螺钉	Screw	1	1
35	S10009	GB/T80-1985螺钉M6×8	Screw	2	2
36	301725	SG-191K-20F-0521倒送料扳手（喷漆）	Feed lever	1	1

6.送料分组件 Machine frame components

序号 Ref.No.	图号 Part No.	名 称	Description	件数 Amt. M	H
1	13726008	JK-迅利IIIB-0632送料驱动偏心销	feeding-drive bias pin	1	1
2	13728012	垫圈	washer	1	1
3	13728011	垫圈	washer	3	3
4	S04028	GB/T 818-1985螺钉M5x8	Screw	1	1
5	13724005	GB/T 276 轴承608	Bearing	1	1
6	13704013	JK-迅利IIIB-0638送料驱动基座臂	Feed friving base arm	1	1
7	H05012	GB/T 896-1986挡圈4	D-Ring	1	1
8	13710006	JK-迅利IIIB-0643送料驱动凸轮	Feed driving cam	1	1
9	S09100	GB/T 77 螺钉M6×0.75x6	Screw M6×0.75x6	2	2
10	S10023	GB/T 80-1985固定螺钉M6x0.75 L=10	Screw	2	2
11	13710002	JK-迅利IIIB-0602剪线凸轮	Thread trimmer cam asm.	1	1
12	B10040	NSK 6202 ZZNR轴承	Bearing	1	1
13	13722022	GB13871-1992 Φ35xΦ12x12抬牙轴油封	Feed driving shaft oil seal	2	2
14	13702005	JK-迅利IIIB-0606抬牙轴	Feed driving shaft	1	1
15	1372500100	JK-迅利IIIB-0623大齿轮组件	Gear, large asm	1	1
16	13702020	JK-迅利IIIB-0623-1大齿轮芯轴	big-gear axis	1	1
17	S09100	GB/T 77 螺钉M6×0.75x6	Screw	2	2
18	13725010	大齿轮轮齿	big-gear gear teeth	1	1
19	1370100600	送料摇杆连杆组件	Needle rocker rod asm	1	1
20	H03051	JK-迅利IIIB-0619卡簧	stopper	1	1
21	13724008	GB/T 276-1994 16005滚珠轴承	Bearing	1	1
22	13701006	JK-迅利IIIB-0618-01送料摇摇连杆	Needle rocker rod	1	1
23	S09100	GB/T 77 螺钉M6×0.75x6	Screw M6×0.75x6	2	2
24	13710007	JK-迅利IIIB-0653送料偏心轮	feeding bias wheel	1	
	13910009	JK-迅利IIIB-0653送料偏心轮	feeding bias wheel		1
25	B10040	NSK 6202 ZZNR轴承	Bearing	1	1
26	13703011	JK-迅利IIIB-0609抬牙轴轴承套	tooth-lift axis sheeve	1	1
27	S09100	GB/T 77 螺钉M6×0.75x6	Screw	2	2
28	B04040	NSK 6002 ZZNR轴承	Bearing	1	1
29	13735003	JK-迅利IIIB-0613下同步带轮	Lower sprocket	1	1
30	S09100	GB/T 77 螺钉M6×0.75x6	Screw	2	2
31	H03051	GB/T 894.1 卡簧20	clamp spring	1	1
32	13702010	JK-迅利IIIB-0544调节摆动座销	swing-adjusting pin	1	1
33	001100	GB/T3452.1-1992 O型圈 18×2	Rubber ring	1	1
34	S09100	GB/T 77 螺钉M6×0.75x6	Screw	3	3
35	13701007	JK-迅利IIIB-0558摆动座	swing base	1	1
36	13703006	JK-迅利IIIB-0540送料调节轴前套	Adjusting base shaft metal	1	1
37	13722007	GB13871-1992 Φ20xΦ12x6送料调节轴油封	Oil seal	1	1
38	13702016	JK-迅利IIIB-0554送料调节轴	Feed rocker shaft	1	1
39	137S10005	GB/T77 M5×0.5×6紧定螺钉	Screw	3	3
40	S09103	GB/T 77螺钉M4x4	Screw	1	1
41	13707001	JK-迅利IIIB-0635牙架	Feed base	1	1
42	11214001	JK-8900D-0533送料牙	Feed dog	1	
	11214002	JK-8990DH-3SS牙齿	Tooth		1
43	101S11018	送料牙螺钉	Screw	2	2
44	13726007	JK-迅利IIIB-0621-02摆动板连接短销	Walking foot pin	2	2
45	13704009	JK-迅利IIIB-0622送料摆动板	Connecting link	4	4
46	13726009	JK-迅利IIIB-0618-02摆动板连接长销	Walking foot pin	1	1
47	13726015	JK-迅利IIIB-0625-02摆动板连接中销	swing base connecting pin	1	1
48	1.37E+09	JK-迅利IIIB-0535倒缝电磁铁驱动曲柄组件	Thread shear rock patch asm	1	1
49	13726018	JK-迅利IIIB-0535-02销	pin	1	1
50	13704017	JK-迅利IIIB-0535-01倒缝电磁铁驱动曲柄	Thread shear rock patch	1	1
51	S05222	GB/T70.1 M5x0.8x12螺钉	Screw	1	1
52	20108002	JK-795-1309挡圈	E-ring	4	4
53	201S15003	S057螺钉	Screw	8	8
54	B08007	GB/T5801 NK12/12滚针轴承	Bearing	2	2
55	S05222	GB/T70.1 M5X12送料调节曲柄螺钉	Screw	1	1
56	W03002	GB/T7246-1987 M5弹性垫圈	Spring washer	1	1
57	1370401200	JK-迅利IIIB-0548送料调节曲柄组件	Feed lever arm asm	1	1
58	13704015	JK-迅利IIIB-0548-01送料调节曲柄	Feed lever arm	1	1
59	13726012	JK-迅利IIIB-0548-02送料调节曲柄销	Walking foot pin	1	1
60	H05003	GB/T896-1986挡圈5	E-ring	1	1
61	13702014	JK-迅利IIIB-0648送料摇杆偏心销	feeding rocker bias pin	1	1
62	S09100	GB/T 77 螺钉M6×0.75x6	Screw	2	2
63	13701009	JK-迅利IIIB-0646牙架座	Feed rocker bade arm	1	1
64	13722005	GB/T13871-1992 送料轴油封	Oil seal	1	1
65	13703005	JK-迅利IIIB-0652送料轴轴套	Feed rocker shaft metal	1	1
66	13702009	JK-迅利IIIB-0629送料轴	Feed rocker shaft	1	1
67	1.37E+09	JK-迅利IIIB-0625送料曲柄组件	Feed rocker arm asm	1	1
68	S05220	送料曲柄螺钉M4x16	Screw SM3/16″×28 L=10	1	1
69	13704010	JK-迅利IIIB-0625-01送料曲柄	Feed rocker arm	1	1
70	S09102	GB/T77 螺钉M4×5	Screw	1	1

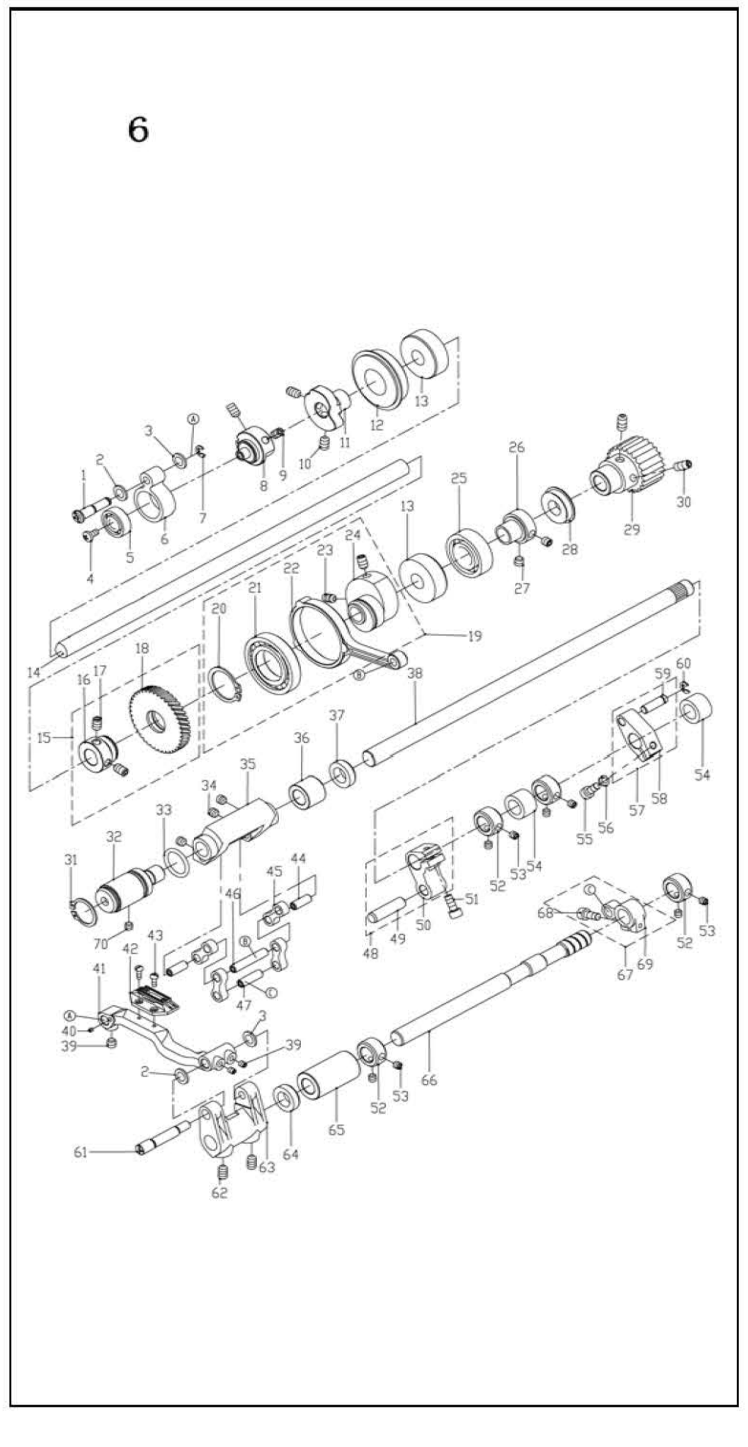

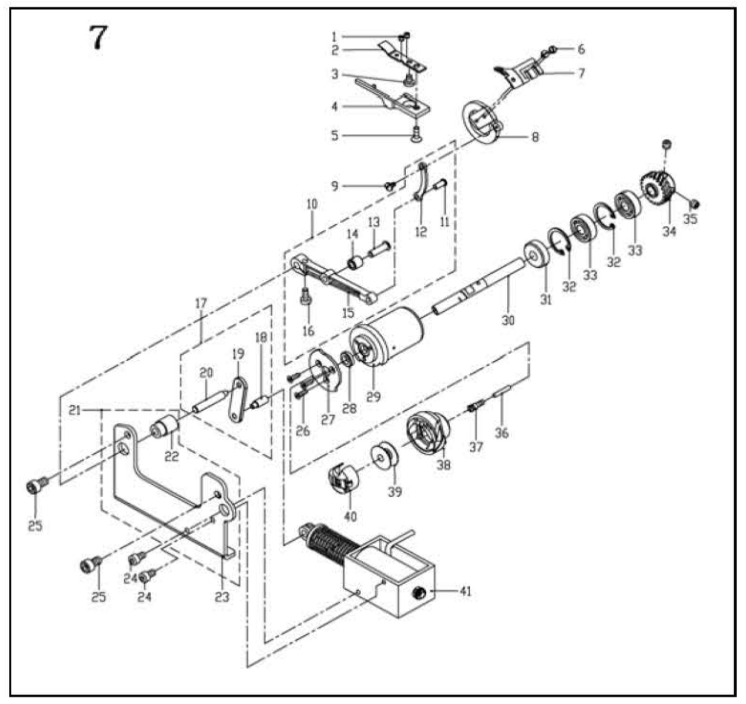

7.切线组件 Thread trimmer componenets

序号 Ref.No.	图号 Part No.	名 称	Description	件数 Amt. M	H
1	S09103	GB/T77 螺钉M4x4	Screw	2	2
2	13719006	JK-迅利IIIB-0819定刀	Cornter knife	1	1
3	137S11014	JK-迅利IIIB-0820定刀螺钉	Screw	1	1
4	13718005	JK-迅利IIIB-0821旋梭定位钩	Bobbin case holder	1	1
5	137S17001	JK-迅利IIIB-0822旋梭定位钩螺钉	Screw	1	1
6	137S11013	JK-迅利IIIB-0815活动刀螺钉	Screw	2	2
7	13719005	JK-迅利IIIB-0816活动刀	Moring knife asm.	1	1
8	13719003	JK-迅利IIIB-0703剪线刀架	Knife bracket	1	1
9	137S11012	JK-迅利IIIB-0805刀架连杆轴位螺钉	Screw	1	1
10	1370500600	JK-迅利IIIB-0802刀架连杆组件	Knife shaft connecting rod asm.	1	1
11	13726020	JK-迅利IIIB-0802-06刀架连杆销		1	1
12	13705007	JK-迅利IIIB-0802-01刀架连杆	Knife shaft connecting rod	1	1
13	13726019	JK-迅利IIIB-0802-04滚柱销	Rool shaft assy pin	1	1
14	13703018	JK-迅利IIIB-0802-05滚柱	Rool shaft assy	1	1
15	13701011	JK-迅利IIIB-0802-02刀架	Knife installing base	1	1
16	S05223	GB/T70.1 螺钉M4×0.7×10	Screw	1	1
17	1370500500	JK-迅利IIIB-0809连接杆组件	Connecting rod asm	1	1
18	13726002	JK-迅利IIIB-0809-02短销	short pin	1	1
19	13712037	JK-迅利IIIB-0809-01连杆	link	1	1
20	13726003	JK-迅利IIIB-0809-03长销	long pin	1	1
21	1.371E+09	JK-迅利IIIB-0708剪线电磁铁挂板组件	trimming electromagnet assembly	1	1
22	13703100	JK-迅利IIIB-0708-01套	metal	1	1
23	13712030	JK-迅利IIIB-0708-02剪线电磁铁固定板	trimming electromagnet fasten plate	1	1
24	S05223	GB/T70.1 螺钉M4×0.7×10	Screw	2	2
25	S05224	GB/T70.1 螺钉M6x10	Screw	2	2
26	114S17001	JK-8991DY-0711刀架压板螺钉	Screw	3	3
27	13712038	JK-迅利IIIB-0702刀架压板	Screw	1	1
28	11522001	JK-8991DY-0672油封	Oil seal	1	1
29	13703300	JK-迅利IIIB-1601下轴前套	Hook driving shaft metal compl	1	1
30	13703301	JK-迅利IIIB-1602下轴	Hooking driving shaft	1	1
31	1142201400	JK-8990-0658下轴前轴套油封	Oil seal	1	1
32	H01100	GB/T893.1 卡簧22	stopper	2	2
33	13724005	GB/T276 轴承608	Bearing	2	2
34	13725002	JK-迅利IIIB-0717斜齿轮	Gear, small	1	1
35	S09100	GB/T77 螺钉M6x0.75x6	Screw	2	2
36	11423003	JK-8990-0627下轴限油芯	Oil wick	1	1
37	101S30005	JK-5550-0508下轴限油螺钉	Oil seal screw	1	1
38	11418003	广濑中厚料旋梭(扩大缝纫范围)	Hook asm.	1	
	11218002	JK-8900D进口厚料旋梭（7.94ATR）	Hook asm.		1
39	10118003	JK-5550-1019梭心	Bobbin	1	1
40	11218504	JK-8900D梭壳	Bobbin case asm.	1	1
41	1373001400	JK-迅利IIIB-0810剪线电磁铁组件	Solenoid asm.	1	1

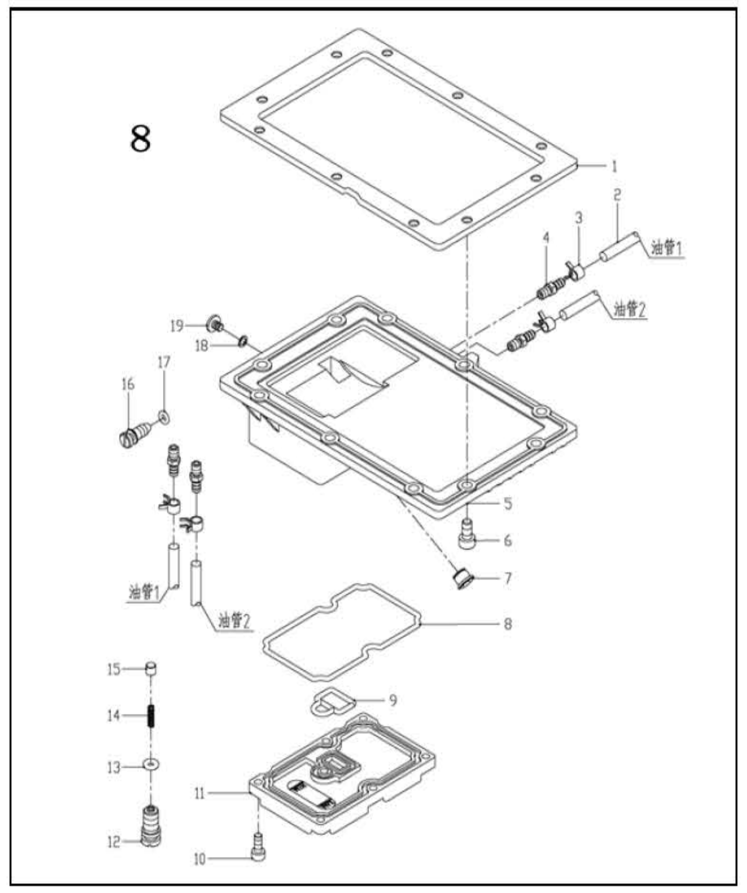

8、润滑部件 Oil lublication components

序号 Ref.No.	图号 Part No.	名 称	Description	件数 Amt. M	H
1	13722015	JK-迅利IIIB-0904齿轮箱盖垫	Gear box packing	1	1
2	12921006	JK-58420-F36锥尼龙油管（Φ3xΦ5）	Tube	2	2
3	11412055	JK-8990-0840Φ10.2油管卡簧	Pipe stopper	4	4
4	114S30009	JK-8990-0814润滑连接器	Lubrication connector	4	4
5	13701010	JK-迅利IIIB-0907齿轮箱盖	Gear box cover	1	1
6	S05222	GB/T70.1 螺钉M5x0.8x12	Screw	10	10
7	13736007	JK-迅利IIIB-0908注油塞	oil-adding plug	1	1
8	13722017	JK-迅利IIIB-0912密封圈	seal ring	1	1
9	13722021	JK-迅利IIIB-0916密封圈（小）	seal ring	1	1
10	S05223	GB/T70.1 螺钉M4×0.7×10	Screw	7	7
11	13711016	JK-迅利IIIB-0910盖板	plate	1	1
12	114S30010	JK-8990-0837柱塞螺钉	Screw	1	1
13	10122010	JK-5550-0217定位螺钉O型圈	Rubber ring	1	1
14	11427021	JK-8990-0836柱塞弹簧	Plunger spring	1	1
15	10526003	JK-8990-0835柱塞	Plunger	1	1
16	114S30015	油量调节螺钉	Oil adjusting screw	1	1
17	001038	GB/T3452.1-1992 O型圈3.5×2.4	Rubber ring	1	1
18	10128015	螺纹销橡胶垫圈(厚)	threaded pin rubber washer	1	1
19	114S11011	JK-8990-0839齿轮箱盖螺钉	Screw	1	1

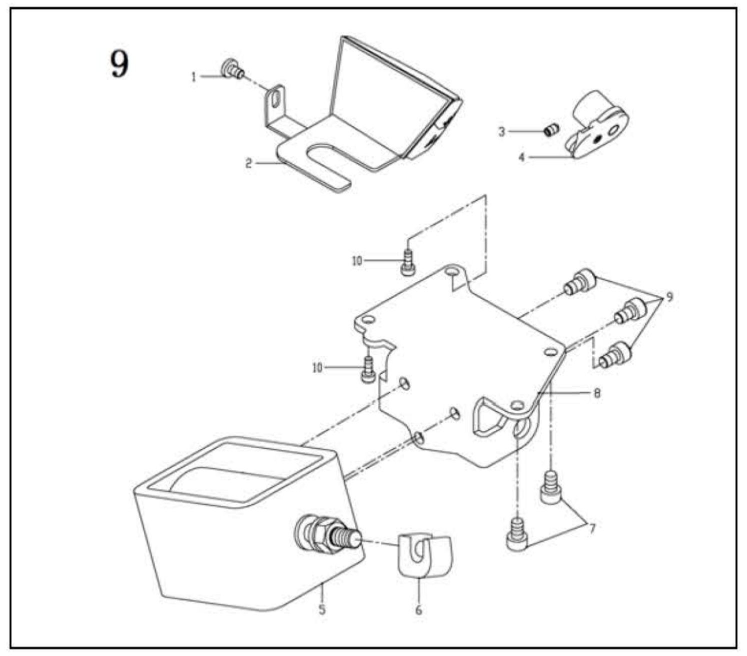

9.倒送料开关组件 Reverse feed switch compoments

序号 Ref.No.	图号 Part No.	名 称	Description	件数 Amt. M	H
1	101S11001	JK-5550-0106后窗板螺钉	Screw	1	1
2	1373000100	自动倒送料开关组件	Reverse feed switch asm.	1	1
3	S10008	GB/T80 凹端紧定螺钉 M4x6	Screw	1	1
4	1143002600	JK-迅利II-0735小鸟巢电磁铁组件	Solenoid components	1	1
5	1373000800	JK-迅利IIIB-1001倒缝电磁铁组件	Reverse feed solenoid base asm.	1	1
6	13704008	JK-迅利IIIB-1003倒缝电磁铁顶杆接头	reverse electromagnet rod connector	1	1
7	S05222	GB/T70.1 螺钉M5x0.8x12	Screw	2	2
8	13712019	JK-迅利IIIB-1221倒送料电磁铁挂板	Reverse feed solenoid base asm.	1	1
9	S05200	GB/T70.1 螺钉M5x0.8x10	Screw	3	3
10	S05223	GB/T70.1 螺钉M4x0.7x10	Screw	2	2

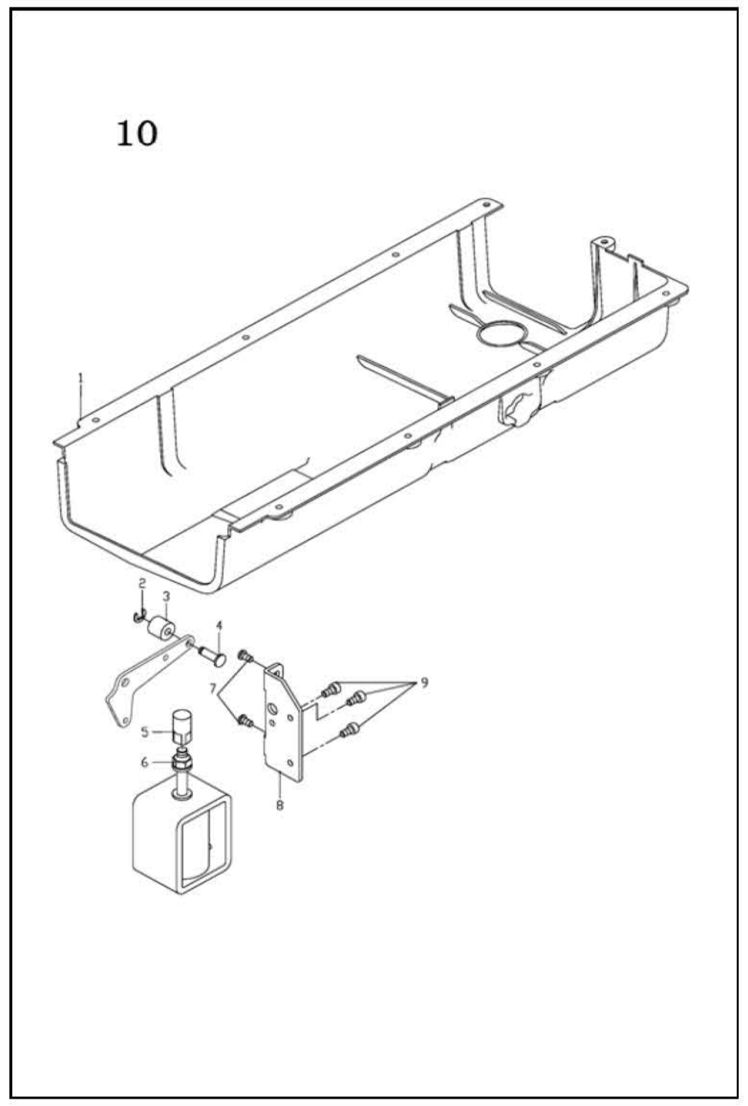

10.油盘、膝控抬压脚组件 Washer & knee lifter compone

序号 Ref.No.	图号 Part No.	名 称	Description	件数 Amt. M	H
1	13711022	JK-迅利IIIB-1319油盘	Washer	1	1
2	H05006	GB/T896-1986挡圈5	E-Ring	2	2
3	13703013	JK-迅利IIIB-1313自动抬压脚顶轮	auto-lift top wheel	1	1
4	13726011	JK-迅利IIIB-1330顶轮轴销	top wheel axis pin	1	1
5	13702021	JK-迅利IIIB-1119抬压脚电磁铁顶杆	lift electromagnet top rod	1	1
6	1.373E+09	JK-迅利IIIB-1105抬压脚电磁铁组件	Magnetic plug asm.	1	1
7	101S11001	JK-5550-0106后窗板螺钉	Screw	2	2
8	13712039	JK-迅利IIIB-1121抬压脚电磁铁固定板	lift electromagnet fasten plate	1	1
9	S05200	GB/T70.1 螺钉M5x0.8x10	Screw	3	3

12.线架组件 Thrread stand components

序号 Ref.No.	图号 Part No.	名 称	Description	件数 Amt. M	H
1	1013100700	JK-5550-1025-00线架组件	Thread Stand Components	1	1
2	20131008	JK-795-1708线圈定位套	winder position sleeve	2	2
3	20131006	JK-795-1706线托棒	thread-holding rod	2	2
4	20131010	JK-795-1710线盘垫	Spool rest cushion	2	2
5	20131007	JK-795-1707线盘	thread plate	2	2
6	10112057	JK-5550-1025-09下线架过线杆	Thread guide asm	1	1
7	W02027	GB/T93 垫圈5	Washer	2	2
8	N01034	GB/T6170 螺母 M5	Nut	6	6
9	20131019	JK-795-1719棒帽	rod cover	1	1
10	10112040	JK-5550-1025-07上线架过线杆	Thread guide asm	1	1
11	W01047	GB/T97.1 垫圈 5	Washer	2	2
12	S04050	JK-5550-1025-19螺钉 M5 L=19	Screw	3	3
13	10113011	JK-5550-1025-1002过线圈（内）	Thread guide ring	2	2
14	10113010	JK-5550-1025-1001过线圈（外）	Thread guide ring	2	2
15	20131001	JK-795-1701上管	up rod	1	1
16	20131003	JK-795-1703套	cover	1	1
17	S04051	JK-5550-1025-19螺钉	Screw	1	1
18	20131002	JK-795-1702下管	down rod	1	1
19	W021048	GB/T97.1 垫圈16	Washer	2	2
20	10122106	JK-5550-1025-21橡胶垫圈	Washer	2	2
21	N02004	GB/T6173 螺母 M16x1.5	Nut	1	1

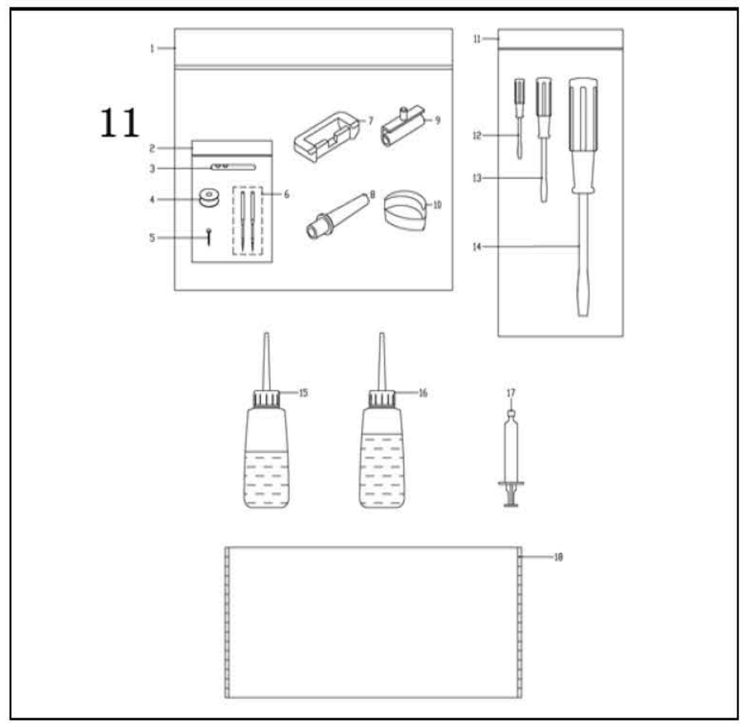

11.附件组件 Accessorie part components

序号 Ref.No.	图号 Part No.	名 称	Description	件数 Amt. M	H
1	20131077	20x15袋子	bag	1	1
2	10131018	12.5x6.5袋子	bag	1	1
3	11212001	JK-8990D-0107过线柱	Needle thread guide pin	1	1
4	10118003	JK-5550-1019梭心	Bobbin	2	2
5	101S30010	JK-5550-1003机头连接钩座钉(消耗)	Rubber cushion nail	8	8
6	10117001	JK-5550-1015机针（14#）	Needle DB×1#14-2	4	4
7	10122026	JK-5550-1002机头连接钩座	Rubber cushion	2	2
8	10111011	JK-5550-1021机头支柱	Frame support bar	1	1
9	1011203100	JK-5550-1001-00机头连接钩组件	Higne compl asm	2	2
10	11422030	JK-迅利IIIB-1412机头角垫	Head corner pad	2	2
11	20131078	32.5×7袋子	bag	1	1
12	10131004	螺丝刀（小）	Screw driver, small	1	1
13	10131003	螺丝刀（中）	Screw driver, middle	1	1
14	10131002	螺丝刀（大）	Screw driver, big	1	1
15	11631008	JK-5842-Z33油壶（含130ml白油）	oil pot	1	1
16	11631008	JK-5842-Z33油壶（含150ml白油）	oil pot	1	1
17	11411029	JK-8990注射器(含0.003kg进口黄油)	injection	1	1
18	40131017	JK-T1850-1138防尘罩	dust cover	1	1

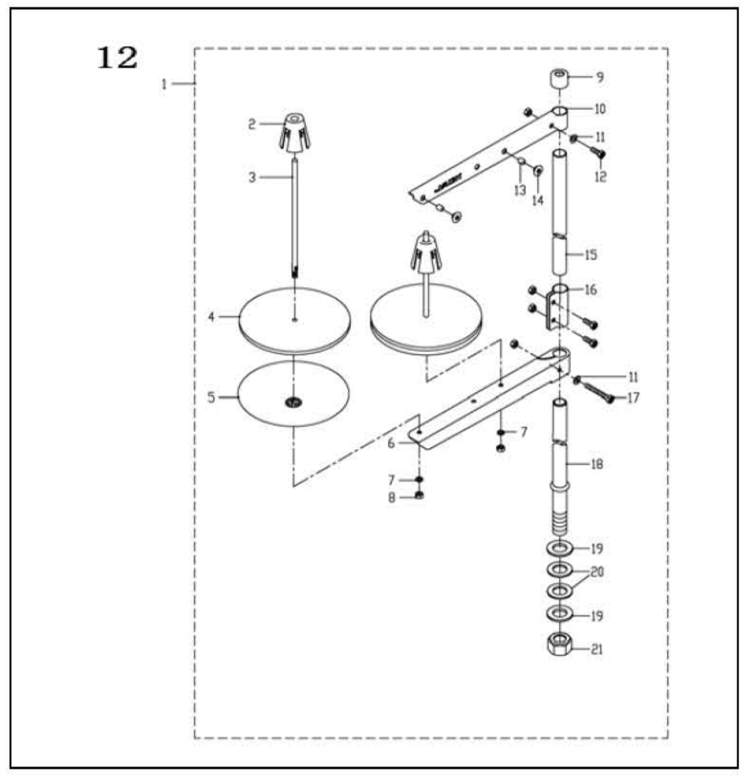

新杰克缝纫机股份有限公司

公司地址：台州市椒江区机场南路十五号
邮编：318000
国内销售部：
电话：0086-576-88177788 88177789
传真：0086-576-88177758
国贸部：
电话：0086-576-88177782 88177774
传真：0086-576-88177787
免费售后服务电话：400-8876-858
http://www.chinajack.com

资料如有更改，恕不另行通知，以实物为准。 2013.06.25